KEITHLEY
A Tektronix Company

Application Note Series

Number 3274

Rechargeable Battery Charge/Discharge Cycling Using the Keithley Model 2450 SourceMeter® SMU Instrument

Introduction

Rechargeable, or secondary, batteries are commonly used in place of disposable batteries in electronic devices such as laptops, video game controllers, mobile phones, digital cameras, and remote controls. In an effort to improve upon or replace existing battery technologies, researchers are studying ways to increase battery life and, at the same time, decrease the cost of rechargeable batteries. Common types of rechargeable batteries include Li-ion (Lithium Ion), Ni-MH (Nickel Metal Hydride), and NiCd (Nickel Cadmium). The characteristics of a rechargeable battery are commonly tested using discharge and charge cycling. Cycle tests provide information about the battery such as its internal chemistry, capacity, number of usable cycles, and lifetime. In production testing, a discharge/charge cycle is often performed to verify battery specifications and to ensure it is not defe

A typical battery discharge/charge test configuration often includes a programmable power supply, an electronic load, an electronic switch, a voltmeter, and an ammeter. These systems req

synchroniz

power

for

electrochemical studies. A potentiostat is an electronic instrument designed to control the voltage difference between two electrodes, typically a working electrode and a counter electrode. A galvanostat is a control and measuring device that has the ability to keep the current through an electrochemical cell constant. Controlling the current through a cell, like a rechargeable battery, is easier than controlling the potential at an electrode.

Unfortunately, there are disadvantages to using a potentiostat or a galvanostat. Many of these instruments don't have a display or many control knobs but come with designated software to run specific tests on a user-supplied PC. Users typically don't have control if they want to change a test or re-use the equipment for an application not specified in the list of predefined tests. Without access to the source code or the programming commands, users are unable to perform customized tests, or to reuse the equipment for other applications (such as basic I-V curves) in the lab.

Many potentiostats or galvanostats may also have limited current and voltage source output capacity. Galvanostats are often limited to hundreds of milliamps or less in sink (discharge) or source (charge) mode. High current options may not be able to sink current.

Battery testing can be simplified by using an instrument called a Source Measure Unit (SMU) or SourceMeter® instrument. A SourceMeter is a type of test instrument that is capable of sourcing and measuring both current and voltage. Keithley's Model 2450 SourceMeter SMU Instrument has the flexibility to source/sink current as well as measure voltage and current, making it a perfect solution for galvanic cycling of batteries. By using the Model 2450, the user only needs to set up a single unit instead of an entire rack full of equipment. As a result, the Model 2450 can charge up the battery by sourcing current, discharge the battery by dissipating power, and monitor the battery's voltage and load current.

- ±21V @ ±1.05A
- 100 @ ±105 mA.

Figure 1 illustrates a typical system for charge/discharge cycli

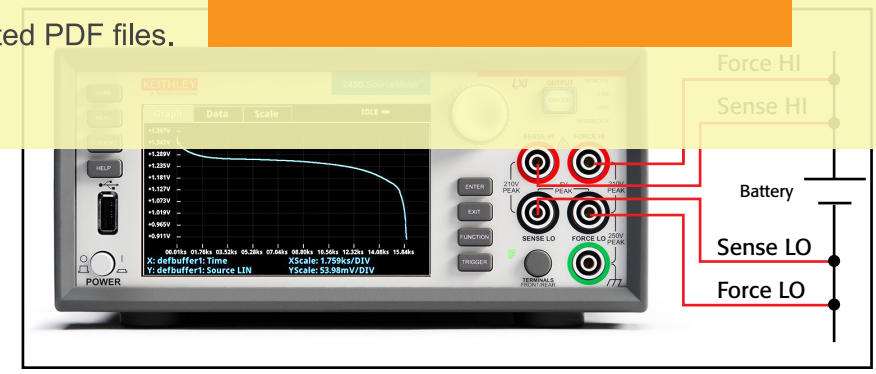

Figure 1. Battery discharge test graphed on Model 2450 SourceMeter SMU Instrument.

Battery Charging/Discharging

Rates for constant current charging and discharging are defined in terms of the battery's capacity, which is the amount of electrical charge that the battery can store. The capacity is specified in milliampere-hours (mAh) available and should be expressed in terms of a discharge, or load, current. The rate at which the discharge current will discharge the entire battery in one hour is known as the C-rate. For example, a battery rated at 1000mAh will output 1000mA for one hour if discharged at 1C. If a 500mAh cell is discharged at 50mA, then it is discharged at

one-tenth the C-rate (0.1C) and therefore can source 50mA for ten hours.

Test Description

For both the charging and discharging cycles, the Model 2450 SourceMeter SMU Instrument is configured to source voltage and measure current. A simplified circuit diagram of both the charge and discharge cycles is shown in ***Figure 2***.

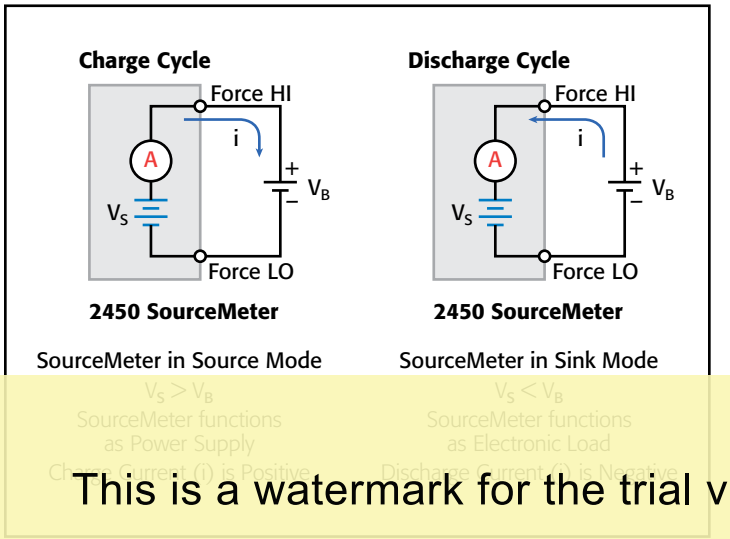

Figure 2. Charge and discharge circuit diagrams.

A battery is usually charged using a constant current. This is accomplished using the Model 2450 SourceMeter SMU Instrument [illegible] current limit. When the battery voltage is less than the voltage output setting of the Model 2450. As a result, this voltage difference drives a current that is immediately limited to the user-defined current limit. When in current limit, the Model 2450 is acting as a constant current source until it reaches the programmed voltage level. As the battery becomes fully charged, the current will decrease until it reaches zero or near zero. To prevent safety hazards or damage to the battery, care must be taken not to overcharge the battery.

When discharging a battery, the Model 2450 SourceMeter SMU Instrument operates as a sink because it is dissipating power rather than sourcing it. The voltage source of the Model 2450 is set to a lower level than the battery voltage. The current limit sets the discharge rate. When the output is enabled, the current from the battery flows into the HI terminal of the Model 2450. As a result, the current readings will be negative. The discharge current should stay constant until the battery voltage decreases to the voltage source setting of the Model 2450.

Making Connections to the Battery

To set up the test, the Model 2450 SourceMeter SMU Instrument is connected to the battery as shown in ***Figure 3***. A four-wire, or remote sense, connection is made from the instrument terminals to the battery to eliminate the effects of the lead resistance. This enables the battery voltage to be measured as close as possible to its terminals.

The Force HI and Sense HI output terminals of the Model 2450 are connected to the positive (+) terminal of the battery and the Sense LO and Force LO outputs are connected to the negative (–) terminal of the battery.

When the output of the Model 2450 SourceMeter SMU Instrument is turned off, be sure that it is set to the High Impedance (High Z) Output Off State. With High Z Output Off State selected, the output relay opens when the output is turned off. This will prevent the battery from draining while the output is off. To set the Output Off State to High, press the MENU key and select Source Settings. Select High Impedance and then press HOME.

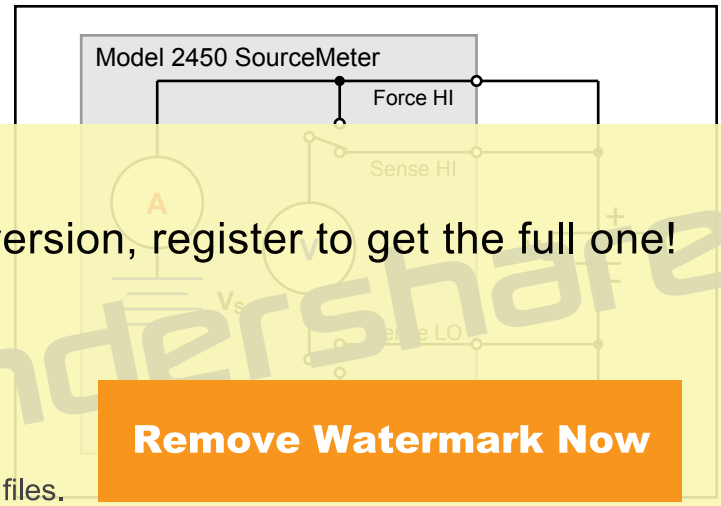

Figure 3. Connecting the Model 2450 SourceMeter SMU Instrument to the battery.

Automating the Discharge Cycle

Charging and discharging cycles often take several hours, so automating the test is important. The tests can be executed using any of the supported communication interfaces for the instrument (GPIB, USB, or Ethernet). The rear panel connection locations for the remote communication interfaces are shown in ***Figure 4***.

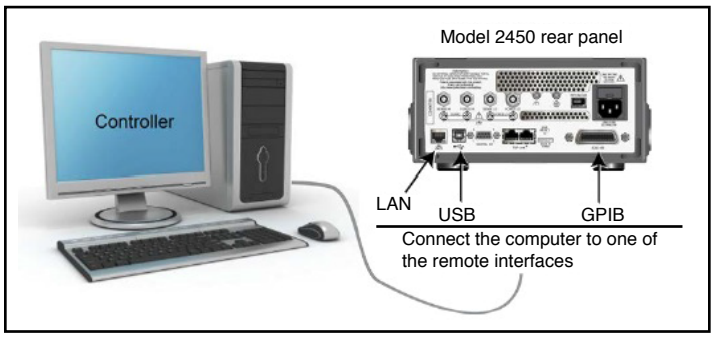

Figure 4. Model 2450 SourceMeter SMU Instrument remote interface connections.

For charging and discharging, the Model 2450 should be programmed to perform the following steps:

1. Set the measurement to a four-wire configuration.
2. Set the Model 2450 to measure current. This will allow monitoring of the load current.
3. Use the High Impedance Output Off State. This output off state opens the output relay when the Output is turned off. This will prevent the battery from draining when the battery is connected with the Output off.
4. Set the Model 2450 to output voltage. Even though the unit is set to output voltage, it will be operating in constant current mode because it will be in current limit until it reaches the desired voltage.

   For charging the battery, $V_S > V_B$. For discharging the battery, $V_S < V_B$.
5. Turn on the voltage source readback function. This will enable the Model 2450 to measure the voltage source output, which is either source or discharge voltage.
6. Set the current (or amplitude) to the current level at which the battery is to be charged or discharged. This is the load current of the test.
7. Read back the load current, source readback voltage, and the relative time stamp.
8. Monitor the voltage until the battery voltage reaches the desired voltage level and stop the test.
9. View the voltage output of the battery on the graph of the Model 2450.

Using the Model 2450 SourceMeter SMU Instrument to Discharge a 2300mAH AA Battery

A 2300mAH AA (1.2V) battery was used to illustrate how to discharge a battery by using the Model 2450 SourceMeter SMU Instrument. The instrument was programmed as described in the steps listed in the previous section (four-wire, source voltage, measure current, etc.) For this particular test, a 2300mAH AA battery was discharged at a rate of 0.2C by using a 460mA load current. Readings of the battery voltage, load current, and relative time were taken every ten seconds until the battery voltage reached the specified level, 1V. The results of measuring the discharge characteristics of the 2300mAH battery are shown in the graph of ***Figure 5***.

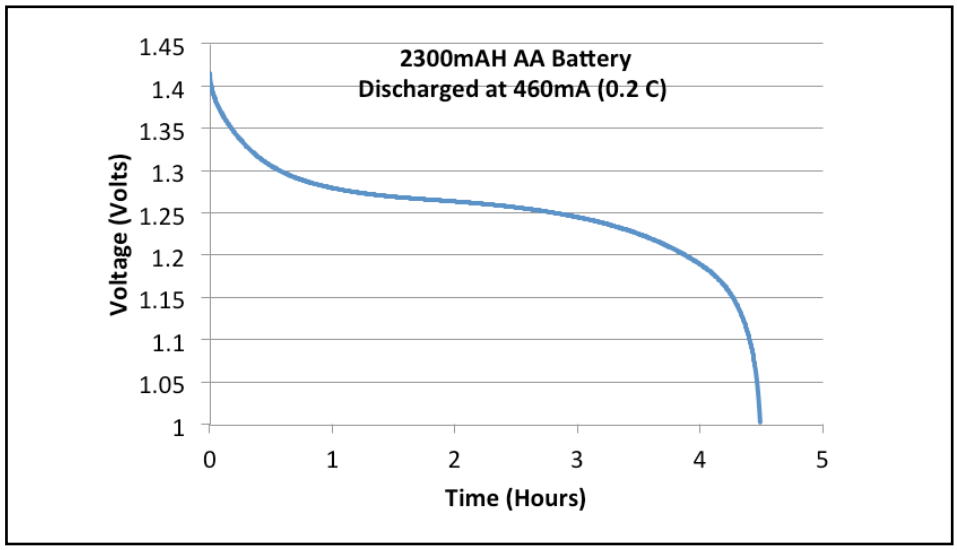

Figure 5. Discharge characteristics of 2300mAH AA battery.

Figure 6. Model 2450 SourceMeter SMU Instrument displaying the load current, battery voltage, and elapsed test time while discharging a AA battery.

In addition to monitoring the readings over the bus, the Model 2450 SourceMeter SMU Instrument can simultaneously display on its user interface the load current, the battery voltage, and the elapsed test time while the test is in progress. Notice the large, easy-to-read measurements of the AA battery on the Model 2450 display that is shown in the screen capture in ***Figure 6***. The user can also view the voltage output of the battery in real time, on the front panel display of the Model 2450 SMU.

The code used to generate the discharge characteristics is listed in the Appendix. Although the Model 2450 SourceMeter SMU Instrument's flexibility lets the user choose either SCPI or TSP® (Test Script Processor) commands for programming, this code was written with TSP commands using the software tool, Test Script Builder. This is a free software tool that is provided with the Model 2450 to help users create and modify TSP code and scripts. It also has an immediate instrument control console to send commands and receive data from the instrument.

Appendix: TSP code used to generate discharge characteristics of the 2300mAH battery

```
--Reset the instrument and clear the buffer
reset()

--Source Settings
smu.source.func = smu.FUNC_DC_VOLTAGE
smu.source.offmode = smu.OFFMODE_HIGHZ
smu.source.level = 1
smu.source.range = 2
smu.source.readback = smu.ON
smu.source.ilimit.level = 460e-3

--Measurement Settings
smu.measure.func = smu.FUNC_DC_CURRENT
smu.measure.range = 460e-3
smu.measure.sense = smu.SENSE_4WIRE

--Set the voltage limit for the battery to stop discharging
--Set the variable for number of iterations
voltLimit = 1.0
iteration = 1

--Turn on the source output
smu.source.output = smu.ON

--Change display to user screen
display.changescreen(display.SCREEN_USER_SWIPE)

--Keep taking readings in the while loop until the measured voltage
--is equal to the voltage limit
while true do
        --Take a reading and get the current, voltage and time
        curr, volt, time = smu.measure.read()
        hours = defbuffer1.relativetimestamps[iteration]

        --Print the # of completed cycles, the voltage and the time for
        --the iteration.  Display information on front panel
        print("Completed Cycles: ", iteration, "Voltage: ", volt, "Time: ", time)

        display.settext(display.TEXT1, string.format("Voltage = %.4fV", volt))
        display.settext(display.TEXT2, string.format("Current = %.2fA, Time = %.2fHrs", curr, hours))

        --Increment the number of iterations and wait 10 seconds
        --Compare the measured voltage to the voltage limit
        --Exit the loop if it is
        if volt <= voltLimit then
                break
        end

        iteration = iteration + 1
        delay(10)
end

--Turn the output off when the voltage limit is reached
smu.source.output = smu.OFF

--Print out the measured values in a 4 column format
print("\nIteration:\tCurrent:\tVoltage:\tTime:\n")
for i = 1, defbuffer1.n do
        print(i, '\t', defbuffer1[i], '\t', defbuffer1.sourcevalues[i], '\t', defbuffer1.relativetimestamps[i])
end
```

Conclusion

The Model 2450 SourceMeter SMU Instrument is an ideal tool to perform charge and discharge cycle testing on rechargeable batteries because of its four-quadrant, high power output and ability to measure both current and voltage accurately. Using a single instrument to perform battery testing simplifies test setup, reduces programming time, and saves rack space.

KEITHLEY
A Tektronix Company

A Greater Measure of Confidence

KEITHLEY INSTRUMENTS ■ 28775 AURORA RD. ■ CLEVELAND, OH 44139-1891 ■ 440-248-0400 ■ Fax: 440-248-6168 ■ 1-888-KEITHLEY ■ www.keithley.com

BENELUX
+31-40-267-5506
www.keithley.nl

FRANCE
+33-01-69-86-83-60
www.keithley.fr

ITALY
+39-049-762-3950
www.keithley.it

MALAYSIA
60-4-643-9679
www.keithley.com

SINGAPORE
01-800-8255-2835
www.keithley.com.sg

BRAZIL
55-11-4058-0229
www.keithley.com

GERMANY
+49-89-84-93-07-40
www.keithley.de

JAPAN
81-120-441-046
www.keithley.jp

MEXICO
52-55-5424-7907
www.keithley.com

TAIWAN
886-3-572-9077
www.keithley.com.tw

CHINA
86-10-8447-5556
www.keithley.com.cn

INDIA
080-30792600
www.keithley.in

KOREA
82-2-6917-5000
www.keithley.co.kr

RUSSIA
+7-495-664-7564
www.keithley.ru

UNITED KINGDOM
+44-1344-39-2450
www.keithley.co.uk

For further information on how to purchase or to locate a sales partner please visit **www.keithley.com/buy**

Printed in the U.S.A No. 3274 9.16.14